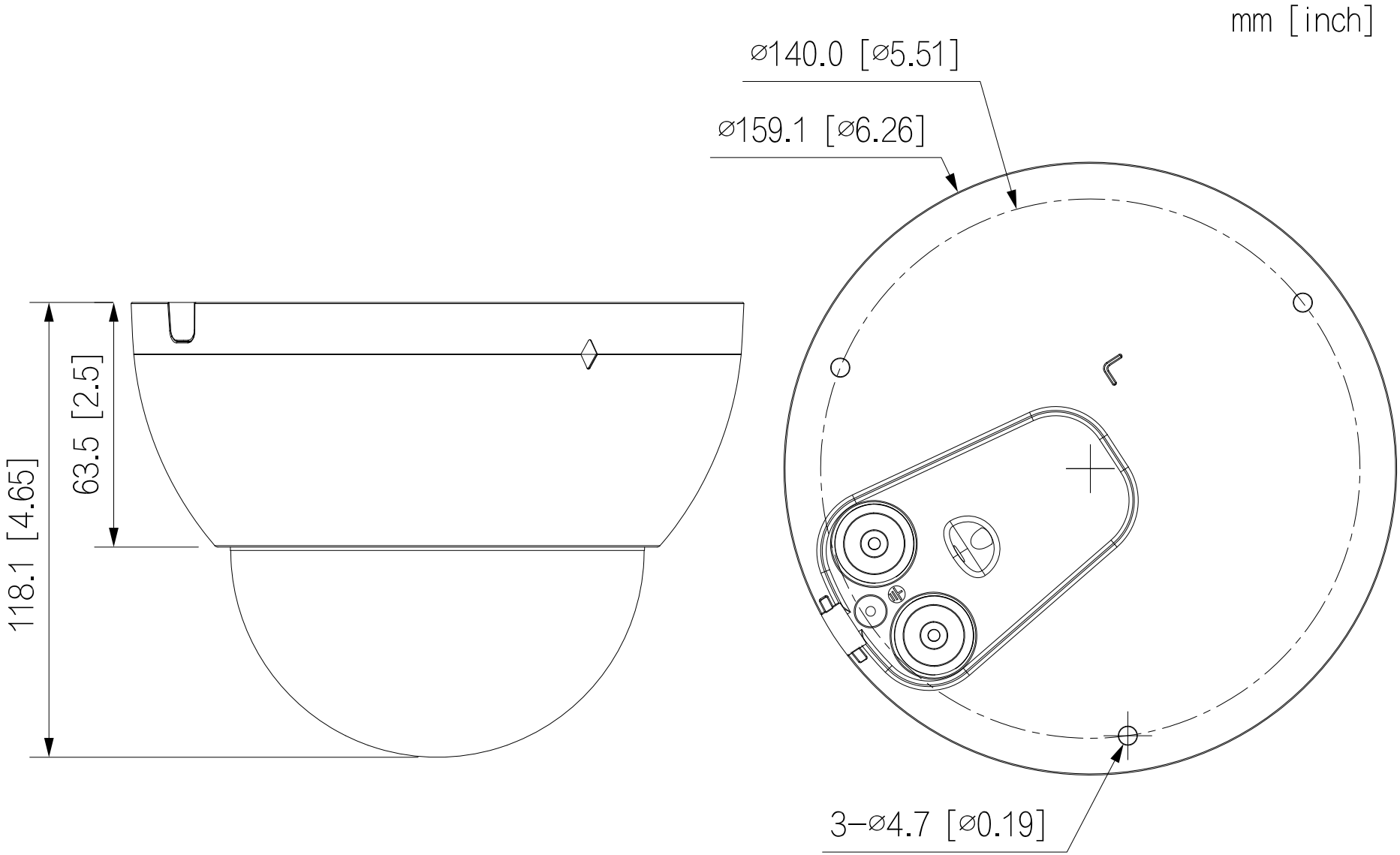
mm [inch]
ø140.0 [ø5.51]
ø159.1 [ø6.26]
118.1 [4.65]
63.5 [2.5]
3-ø4.7 [ø0.19]