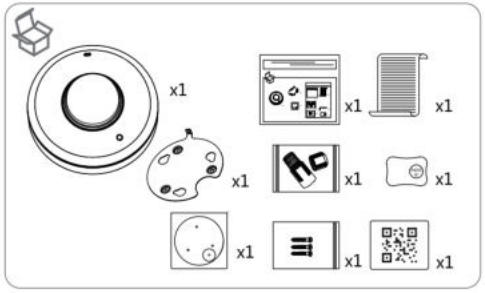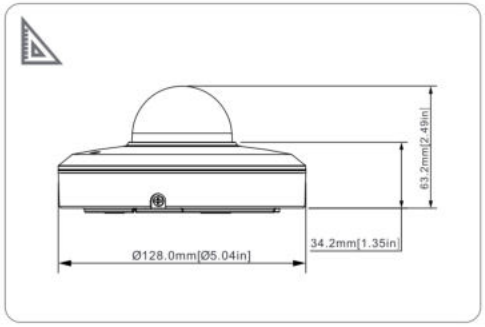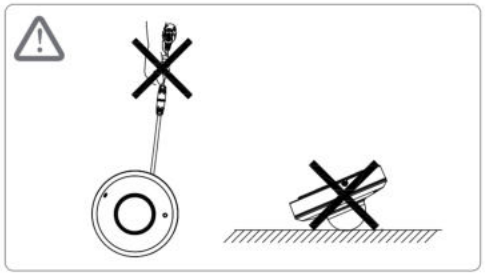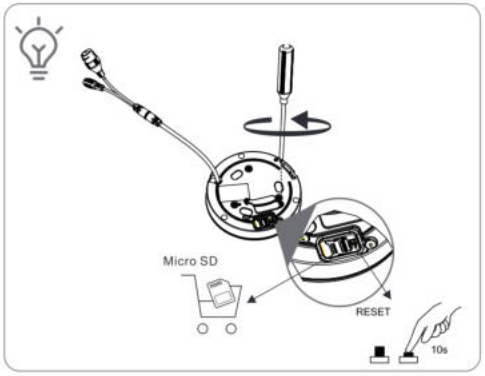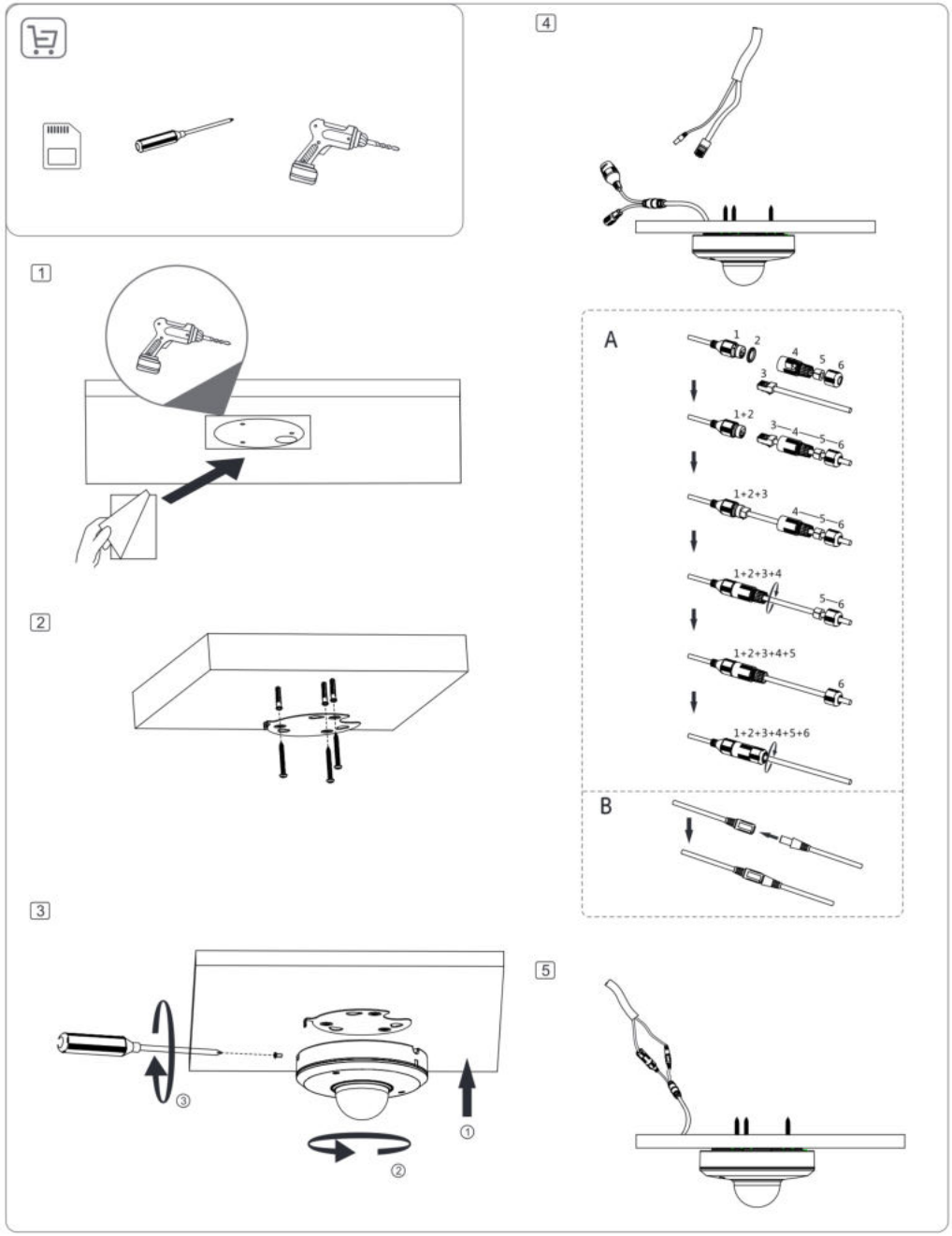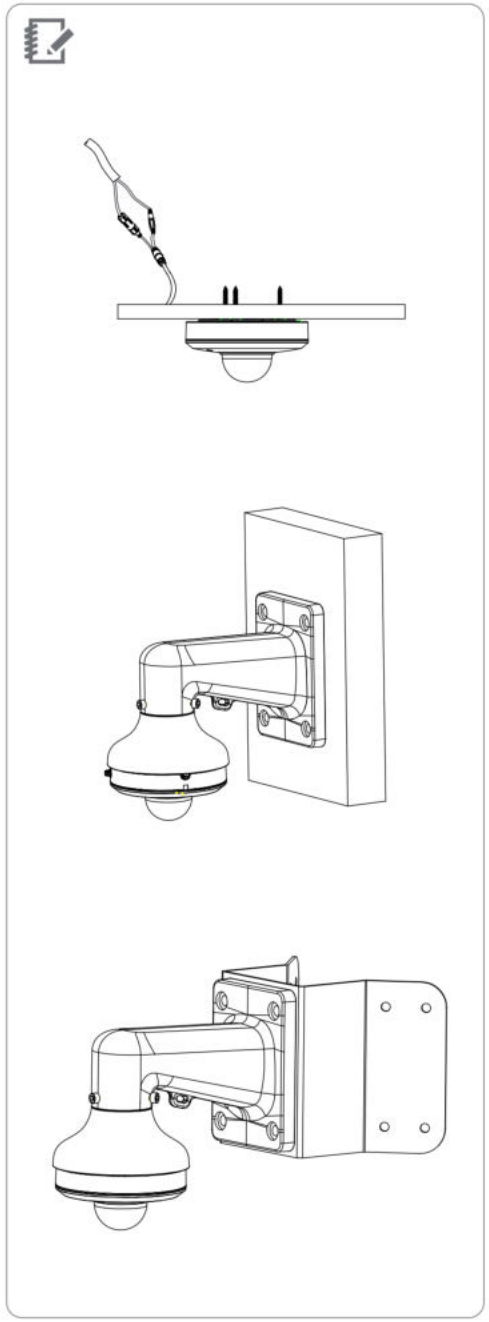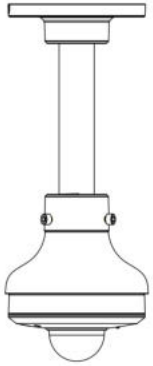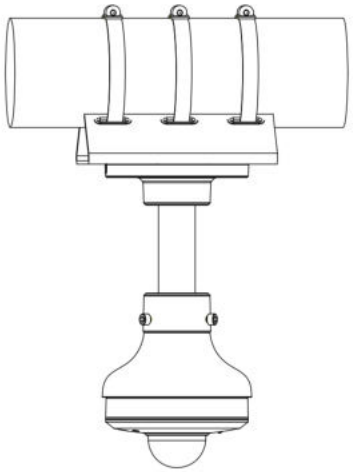Installation Guide V1.0.0 1.2.51.32.15785-000